THE INTERNATIONAL JOURNAL OF SCIENCE & TECHNOLEDGE

Factors Influencing the Implementation of E-Government in Public Services on Issuing Enterprise Permit at Jembrana Regency, Bali, Indonesia

Dr. Rizal Ruben Manullang
Doctoral Student, University of Satyagama, South Jakarta, Indonesia
Lecturer, STIE-IBEK Pangkal Pinang, Indonesia

Abstract:
The research aims to prove that the Leadership factor does have influences on the Public Participation, Information and Communication Technology, Development of Regional Information and Communication, as well as positive implications on the implementation of e-Government in public service for permit issuance in Jembrana Regency, Bali, Indonesia.
Jembrana Regency is one of the regencies, which are successful in implementing e-Government in public service in Indonesia. It was proven by various awards granted to Jembrana. However, the implementation of e-Government during the period of 2011-2013 was not running so well and event stuck. This is the primary motivation for doing the research and proving that the Leadership factor does have influence on the Information and Communication Technology, Development of Regional Information and Communication and affects the implementation of e-Government in Jembrana Regency, Bali.

Keywords: *e-Government, Jembrana, Regency, Regional Autonomy, Public Service, SEM, CFA*

1. Introduction

Jembrana Regency is one of the regencies in Bali which is successful in implementing e-Government in public service in Indonesia. This is proven by various awards received by the regency since 2008.

No.	Note
1.	Indonesia Open Source Award (IOSA) 2011 for the Government of Regency and Municipality.
2.	IOSA 2010, awarded to Jembrana Regency, achieving the 1st position of Regency/City to implement the *Open Source Software* in Government Institution.
3.	Award from Warta Ekonomi *e-Government Award* 2009, awarded to Jembrana Regency as the "*Best Of The Best*" in the IT implementation.
4.	Awards to the Jembrana Government as the Participant of Regency/City with Great Attention to the Research on Science and Technology Awards.
5.	Award to Jembrana Regency as the First Regency in Indonesia to use e-Voting (paperless vote using *touch screen)* applied during the Kepala Dusun Election.
6.	Award and Trophy from Warta Ekonomi *e-Government Award* 2008, *"Best Of The Best*" was to Jembrana Regency as the Government Institution applying e-Gov2008.
7.	Award and Trophy from Warta Ekonomi the First and the Best *e-Government* Award 2008, as the Government Institution applying *e-Gov* 2008.
8.	Award and Trophy of *INVESTMENT AWARD* Nominee for the Regency to Use Integrated Permit Services.

Table 1: Awards received by Jembrana Regency
Source: Office of Information and Telecommunication, Jembrana Regency (2011)

E-Government is defined as the innovative breakthrough in the government domain to use the ICT, especially web-based technology and the data communication network (Internet) and their applications, in order to provide an easy access to the citizen and business to the information, public knowledge and government services.
The concept of e-Government is believed to be capable of providing added value to the government management and improvisation to the public and civil service quality which, for some time, is considered rigid, and providing broader opportunities to the citizen and business to participate in the democratic institution along with the process, in a government domain as the creation of added value for the development of society in a wider scope.
Hubeis (2008) stated that the government policy is closely related to the improvement access and expansion of opportunities, improvement of quality and relevance of activities, improvement of resources efficiency, and so forth. This is followed by the implementation strategies such as improving and strengthening the existing essential programs and those less essential were reviewed

and the sources were mobilized, providing opportunities so that people are more participative, and encouraging the effective handling to the society beyond reach, and involving the participation of all societies. In this context, the access provided to the society by the government using ICT media could be accommodated optimally so that it could improve the participation in order to create more professional and democratic public services and making the society as the development supervisors as well as reducing the potential of loss due to distorted policies.

During the realization of value creation (innovation) and continuous improvement on public services, it can be assured that the good nuances of the government (Good Governance) will be established to answer the ideal of reform which is closely related to the handling of public policies in the Republic of Indonesia.

1.1. E-Government Initiative in Indonesia

Indrajit (2002) stated that the emergence of e-Government concept was based on 3 (three) main drivers: 1) globalized era, which is coming faster than predicted, has caused the development of democratization, human rights, legal, transparency, corruption, civil society, good corporate government, free trade and open market issues, 2) The advancement of information technology in this context is in form of data communication technology, telecommunication and computer, which grows rapidly so that data, information and knowledge could be created relatively faster and easy to distribute to the society without the time and space boundary, and 3).. The increasing quality of life in the world cannot be separated from the increasing performance of private industries in doing its economic role.

The reform spirit, especially in the government bureaucracy and public services in Indonesia has given a new initiative in implementing e-Government. It can be seen in the Instruction of President of Republic of Indonesia Number 3 Year 2003 regarding the policy of e-Government implementation. Overall, the instruction contains; a) The development of reliable and trustworthy services, as well as affordable to common people; b). The setup of management system and working process of Central and Regional Government in a holistic manner; c). The optimal utilization of information technology; d). Increased participation of business and development of information technology and telecommunication industries; e). Development of human resources in the government and improvement of people's e-literacy; f). The implementation of this development in a systematic way using realistic and measureable stages.

The government policies have been reinforced by an initiative from the President of Republic of Indonesia in form of establishment of National Board of Information and Communication Technology based on the Presidential Decree Number 20, dated November 11, 2006. The spirit of this board was the manifestation in implementing the mandate and formulating the public policies and strategic directions including the approval on the implementation of inter-department ICT programs to achieve expected efficiency and effectiveness (Rohman, 2008).

The Presidential Instruction year 2003 was retranslated by the Department of Communication and Information in form of Ministerial Decree Number 58/KEP/M.KOMINFO/3/2008 which provide strategic technical guidance as follows: (a) Quality standard and service reach as well as application development (e-services); (b) Policy on the institution, authority, information and participation of private sectors in its implementation; (c) Policy on the development of good governance and management of change; (d) Guidance on the implementation of project and budgeting of e-Government, competence standard of the e-Government manager; (e) Blue-print of e-Government application which has been issued for the previous policy.

1.2. E-Government and Previous Research Results

Curtin (2007) said that the definition of e-Government in a broader sense is the use of ICT by the government in supporting the public services and governmental tasks in a more effective, efficient and transparent way; providing better services and information presentation for the performance and strategic objectives being implemented by the government to the public as well as providing facilities in order to improve the participation of individual, business and community. Terminology of e-Gov is rather dynamic than the concept of e-Government itself, where it is a transformation of process and mechanism in the domain of government, politics, democracy and public management associated with the

emergence of Internet as the mainstream of community in the mid and late 1990s. A study on e-Government is a form of interdisciplinary concept consisting of government science, public administration, political science, communication and media study, law, public policies, engineering, and computer science.

There is controversy on the definition and meaning while studying e-Government: whether e-Government is seen as a broad definition with inclusive concept, or narrow definition with exclusive concept. Using the technological terminology approach, the understanding on broader definition and inclusive concept tends to be used and only focuses on the word "electronic" or "e" in the government scope; including the use of Internet network as well as its relationship with ICT, computer, and personal computer (PC) up to super microcomputer.

While the use of public management and government institution terminology approach, the e-Government terminology uses a narrow definition with exclusive concept to the field and scope of government administration of using Internet network and types of communication technology used in the process of democracy such as regional head / head of state election, political communication and participation of individual and organization in a community in a government territory (Curtin: 2007).

Indrajit (2002) confirmed that there were indeed some definitions of e-Government. However, from the perspective of benefits, whatever definition of e-Government explained by the experts, it should refer to the benefit of e-Government, such as: 1). Improving quality of services of the government to the stakeholders (society, business, and industry) especially in terms of effectiveness and efficiency in the various aspect of life in a country; 2). Improving transparency, control, and accountability of the government activity

in implementing the concept of Good Corporate Governance; 3). Significantly reduce the total administrative costs, relation, and interaction spent by the government and stakeholders for the activities; 4). Providing opportunities to the government to get resources for new income from the interaction with related parties; and 5). Creating a new society environment which rapidly and accurately answers various problem along with the global change and existing trend; and 6). Empowering society and other parties as the government partners in the distributive and democratic policy making. Sometimes, the development of e-Government was referred to as the conventional development, even some expert stated that it is a model of evolution and even a model of growth that explain a transitional stem from the profile presentation to using web technology, interaction as well as the realization of actual steps in doing transaction using those media.

The model is needed in order to support the initiative of e-Government design and providing assessment whether or not the society is ready to accept public service in terms of both supply and demand perspectives.

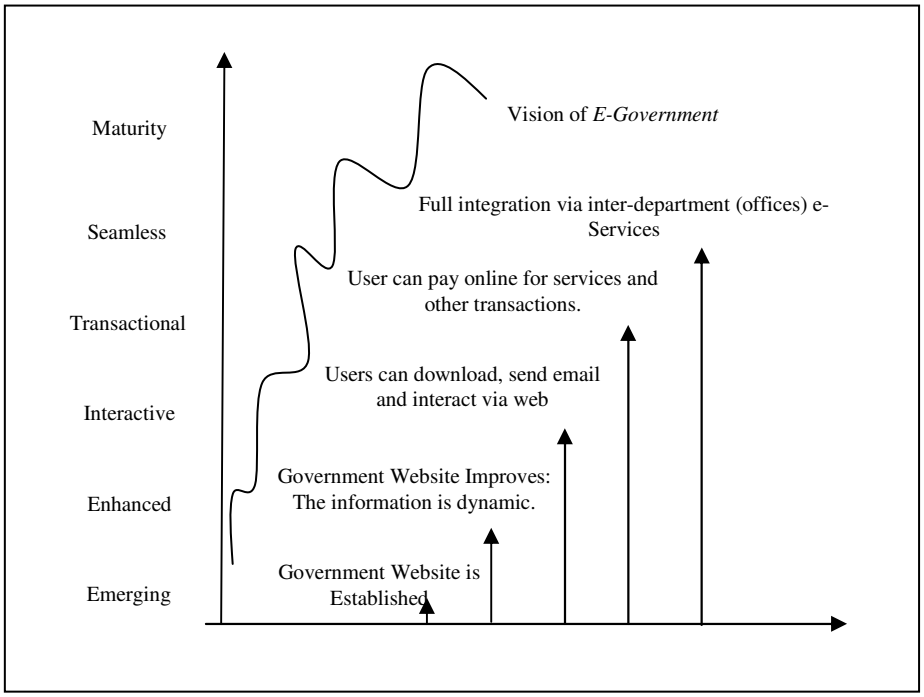

Figure 1: E-Readiness Assessment in Each Stage: Technological, behavior and institutional readiness
Source: Anttiroiko (2001)

Previous research conducted by Afriani and Wahid (2009) stated that the implementation of e-Government in the City of Jambi, Jambi, Indonesia, to serve business had proved a positive influence, especially in the public service and civil service activities in the city. Therefore, it can be said that e-Government is capable and proven to provide positive contribution in the government process, especially in order to rediscover the proper administrative conduct after the reform in Indonesia.

If we look at the diagram, the maturity stage in the implementation of e-Government, it is found that the implementation in the City of Jambi is limited to the enhanced category, where the solution is considered feasible after considering the availability and relatively low speed of Internet network during the course of the research. Although the services were only limited to the data and information which are free to access using the Internet network, the difference was significant in terms of each variable that represents the principles of Good Governance, where it is said that the true e–Government has the capacity to perform good governance by the improved public services.

No.	Variable	Average		*t*
		Before	After	
1	Concern to Stakeholders	2.72	3.79	-12,08*
2	Effectiveness and Efficiency	2,60	3,85	-16.46*
3	Community participation	2,45	4,08	-22.49*
4	Accountability	2,86	3,91	-15.13*
5	Transparency	2,33	4,31	-21.62*

Table 2: Analysis Result of the Research
Impact of e-Government to Good Governance: Empirical Findings from the City of Jambi.
Source: Afriani and Wahid (2009)

1.3. Leadership

Kifle and Cheng (2009) quoted a survey by Heeks (2003), which stated that only 15% of the e-Government project in developing countries was successful, 35% failed totally and 50% failed partially. In the study, it was emphasized that weak leadership is considered as the main cause of the e-Government failure.

Leadership means someone's capability and readiness to influence, guide and direct, as well as organize parts of the human resources of an organizational structure to do something for the sake of common goal. However, it is not only from the perspective of internal management, but leadership must also have the capacity to develop, organize and empower the external entities, that is, the society as primary stakeholder which must experience the change from the implementation of e-Government concept.

A leader must have capacity to find of what should be changed in order that by the role of information system and configuration of e-Government, the government performance as well as its management could be implemented according to the vision and mission set forth before, that eventually could create added values to the public services in the administrative areas. A type of feudalistic bureaucratic leadership seems to still dominate the management of Indonesian government.

Sunarno in Antara (2007) stated that the mindset which is only oriented to the power is felt in each government institution and this should be followed up by the change of leadership attitude towards a transformational attitude. Innovation and creativity should be of strength for a leader in controlling and developing his/her leadership area.

The type of feudalistic leadership which uses "Top-Down" approach and based on formal relationship is no longer relevant while the challenged faced by each government management is no longer internal, but even global in nature. The configuration of e-Government does need emphasize on the type of transformational leadership. Each professional experience of a leader should be a tacit knowledge. Nanoka and Taekuchi (1995) conveyed that in the era of digital economy nowadays, it takes a combination of tacit and explicit knowledge in order to present a novelty in innovation, both in form of product and services, to the interested entities, including public in general as the stakeholder.

The concept does not only apply in the dimension of business management, but a demand for public leader in the midst of highly dynamic and challenging modern community. The combination of tacit and explicit knowledge will support the transformational leadership in providing a clear and measured vision and mission but flexible to changes towards a better strata

The motivation and distribution of inspiration will always be implemented based on the collegial needs in a task force and subordinate by having a greater meaning and challenge, as well as being stimulated through the execution of task and job to be more innovative and creative without reducing the professional accountability.

On the other side, it is the leader that capable to distinguish and accept the existing difference from the needs and demand of individuals. The implementation of e-Government will be easier to implement if the bureaucratic leader has the expected type of leadership.

The advice and development will be measured from the types of creativity and innovation, both in terms of service and function; dissemination of information and public knowledge to be carried out by the subordinates to the society needing the public services as the outcomes of any type of transformational leadership.

The influence of leadership to the information system is rather strong, where it is the core of management and the leadership factor is suspected to influence the effective information system to be used in organization as the effectiveness of any other systems within the organization. Whereas, the reason was that because one of the roles of people positioned as leaders in organization is the informational role.

In playing this role, Siagian (2005) stated that organizational leader acts as: (1) Creator of information system, (2) receiver of information, (3) conveyor of information, (4) users of information, and (5) assessor of information. From the context of these roles, it can be understood that a leader inevitably needs to be involved in all stages of information handling.

Siagian (2005) furthermore stated that if seen from the perspective of leadership, it is clear that there are two prominent sides of leadership: a leadership role in the receiving and transmission of information in one side and the decision maker to be implemented by the subordinates in the other side. Besides understanding the influence of information in organization, the involvement of leader in the creation, maintenance and use of information is also important, although it does not always mean to carry out the activities alone.

Leadership in terms of successful implementation of e-Government cannot be separated from its influence to draw people's attention to participate. We can understand this by three principles of participants in e-Government: (2) Government, (2) Citizen, and (3) Business. The essence of implementing e-Government is a manifestation of interaction between participating entities, where the government is the pivotal role).

In order to understand the interaction, it is easier if we customize the interaction into Government to Citizen (G2C), Government to Business (G2B) and Government to Government (G2G). G2C refers to the interaction between government and consumer entity, of which in this case is citizen. The need of every citizen can be accommodated by this interaction.

G2B is a form of interaction between government entity and business. The government, in this case acts as regulator, certainly has a high intensity to provide government management service for the business. G2G is the manifestation of interaction between government, both inter-department and offices at the central level or City and Regency.

From these customizations of interaction in e-Government configuration, it is worth to know the requirements for realizing the communication and obtaining information for the purpose of achieving ideal democratic goal as described in Table 3.

Prerequisite	Attributes
Infrastructure	Participants must have electronic interfaces such as computer or mobile handsets. There must be a robust, reliable and fast network to connect these participants.
Enabling Software	Software with open architectures to seamlessly connect the front-end, back-end and middle tiers.
Infrastructure	Participants must have electronic interfaces such as computer or mobile handsets. There must be a robust, reliable and fast network to connect these participants.
Enabling Software	Software with open architectures to seamlessly connect the front-end, back-end and middle tiers.
Digitization	Data must become digital: new data must be entered in digital formats; legacy data must be digitized using scanners and document management systems.
Security	User authentication, data protection and protection from external threats.
Universal Standards and Frameworks	Development and compliance of universal standards to exchange data and applications.

Table 3: the Prerequisites for E-Government
Source: Bhogle (2008)

1.4. Public Participation

Participation means to get others to involve, take parts of be in parts of something‘. Participation also contains a deep meaning of ‘involvement' of individual or group in a process of managing activities.

The involvement here has a more specific but broad understanding such as voluntarily involvement in a decision making, planning a design, mobilizing action for a common ideal, supervision and implementation of activity.

According to Syahyuti (2005), participation is a process of growing awareness towards the interrelation between different *stakeholders* in the society, between social groups and communities and the policy makers and other service institutions. Participation is defined as process where all parties can establish and get involved in all initiatives of development. Therefore, participatory development is a process that actively involves society in all substantial decision related to their life. Literally, participation can be defined as the involvement of a person or a group in certain activity. While community participation is a form of direct participation of a community in making policy and decision making which influences their life (Suhirman: 2004).

Sastropoetra, edited by Syuroh (2008) clearly revealed the types of participations in form of; (1) Thought (psychological participation); (2). Energy (physical participation); (3) Thought and Energy (psychological and physical participation); (4) Skill (participation with skills); (5) Goods (material participation); (6) Money (money participation). Furthermore, Sastropoetra in Syuroh (2008) underlined that participation can be manifested in form of consultation, spontaneous contribution, mass action in running a project or activity, engaging in an agreement or executing development.

According to Webler and Tuler (2001), Public Participation is “many things for many people”. In the past, the key word was frequently used to refer to an opportunity in providing comment during public hearing, voting in referenda, or a statement as a member of a social movement. Currently, Public Participation is frequently found in the context of policy making with democracy as the core initiative of self-engaging in the middle of modern society.

Public Participation refers to the variation of procedure which allows various backgrounds of community members who actively participate in deliberating the policy options and in some cases in the level of decision making. Lind and Tyler in Webler and Tuler (2001) stated that the conceptual genre and literatures on Public Participation have been using approach that emphasizes on the honesty (fairness) or procedural justice. In procedural justice, it is very important to pay attention to the elements of public satisfaction towards the decisions, perception on the honesty and support to the authority/government.

In the development, there are some criteria to be proposed as operational variable such as; accurate information, representativeness participation in the decision making and suppression bias (Lind & Tyler: 1988; Thibaut & Walker: 1978) in Webler and Tuler (2001). According to Webler and Tuler (2001), the researchers also paid attention to the relationship between justice, distribution of justice, support for outcomes and belief.

Political Theory of Democracy has also been used to identify fundamental theory of Public Participation. This concept was introduced using variable and criteria in the derivative participation of democracy used by Daniel Fiorino in Webler and Tuler (2001).

The concept of participation is a rather broad and important concept, because one of the indicators of successful development is the participation of the society engaging in the program. Tjokroamidjojo (1989) argued, “People's participation is the participation in sharing the burden and responsibility in the course of development program”.

According to Cohen and Uphoff (1977), participation by the society engaging in the program consists of; 1). Decision making, 2). Implementation, 3). Utilization of benefits, and 4). Evaluation of Development Program.

A research by Booher and Innes (2004) on strategy of public participation showed that collaborative participation can solve complex problems, such as decision making in budgeting and creating improvisation climate to the future action in the middle of emerging difference in the society. Important element in the research is authentic dialog, network and institutional capacity), where the participation was perceived as multi method of citizen interaction with the government to achieve the best outcomes.

1.5. Management of Innovation in the Context of Government Management and Implementation of E-Government

Management of Innovation is a process of organizing innovation to achieve economic and social success in an efficient and effective ways by utilizing all resources of the company and organization (Fontana: 2009) (Tidd, Bessant and Pavit: 2005). While the management of innovation is something related to the way of innovating which result in a success both technically, commercially,

economically, as well as in terms of invention, and implementation of management, structure process or management technique which is one of the forms or **dimensions** of business innovation.

Management of innovation is one of the most popular issues in private domains for the last 10 years. This is not only useful for organizing the growth in the business entity, but also for creating power in dealing with the competition in this rather competitive global era. The essence of management of innovation is that to organize the creation of internal added value for the business itself and seek the improvement of the external use value provided for the customers. The improvement of value creation is expected to be able to result in the economic and social success as the logical consequences of the resulted added value (Fontana; 2009).

The normative logics is of course live up in the government domain, where one of the important aspects to be provided by the government based on the theories or experts advice is to provide a coherent service according to the local values in order that the provision of people needs can be delivered in a proper effectiveness and efficiency.

According to Fontana (2009), there are three (3) aspects in the creation of value; 1). The value creation approach refers to the benefits or net benefits, as the outcomes of the companies as the result of their innovation, after deducted by the expenses. 2). The concept of value creation is closely related to the basic principles of economy that the values presented in the difference between perceived beliefs and/or consumer's willingness to pay, in one side, and other economic costs on the other side. This is similar to the concept of total surplus, of which rather identical to the economic bulk calculation and value for money based on consumer or consumer surplus. Therefore, the value created by the company has a potential to improve the welfare of all stakeholders, and 3). The emphasize on perceived value creation to the perceived benefits is consumer perception, instead of the absolute difference in quality. This perception is linear to the marketing management perception on how the value is created. Therefore, in this case, the greater the value, the higher the efficiency to be implied.

From the above description, it is clear that the creation of added value is in fact linear to the competitive advantage. It means that the competitive advantage of an organization will be established as a result of value creation (both added and use value). In this context, organization should, of course, have value generator capable of producing something new which is beneficial based on the economic and social value contributed to the stakeholders.

1.6. Information and Communication Institution for Regional Development

Regional Information and Communication Institution is very important to measure the successful implementation of e-Government in the field of public services. Reyes and Gil-Garćia (2011) in their research stated that the institutional theory is a theory which supports the understanding to the complex relationship between technology, organizational factors and institutional organization in the social context. Therefore, the argument will arise when the use and design of ICT project does not only discuss about hardware and software (artifacts), but also consider the social and organizational aspect.

Because the locus of the research utilized the integration across departments in form of the Office of Integrated Licensing Service and the Office of Communication and Information Service, which is the offices with full authority on the data cycle up to the process into a useful information, then the following dimensions are necessary; 1) Decision Supporting System, and 2) Electronic Information and Communication, which has been defined in order to prove the capability of explaining the Regional Information and Communication Institution and its implication to the implementation of e-Government in the field of public service in Jembrana Regency.

Intuitional Theory has undergone developments by various means. March and Olsen in Reyes and Garćia (2011) stated that institutional theory as a thought is used as a guidance for the human action or behavior considered appropriate in the society. Berger and Luckman, in Reyes and Garćia defined that Institution is a form of mechanism that creates an objective and constraining perception on the individual behaviors.

Moe (1994) stated that Institutional concept can be used to minimize uncertainty and improve cooperation in the political arena. This way, an institution can be seen as an entity that implements rules to behave, based on various important foundations of culture and mentality to the legislation as well as social norms to the political structures.

Whereas, Wahid (2011) and Reyes and Garćia (2001) referred the study from Scott (2001) that implements the concept of Institutional theory consisting of three elements that supports an institution: (1) Regulative, (2) Normative, (3) Cognitive Culture.

Fountain (1995) proposed a theoretical framework that takes the root to the Institutional theory where the legislations in technology tend to focus on the combination of institution, bureaucratic structure and information technology. The basic logic of this framework is seen as objective technology which is established by organizational and institutional management to arrive at the enacted legislations of technology. The legislations of technology can be understood as perception, design and objective use of ICT such as Internet and various hardware and software. The same also applies to the legislations of technology which brings about the organizational outcomes as well as outcomes in terms of efficiency, effectiveness and transparency.

Institutional theory sees the organization not only as the passive entity but also the active one with the capacity to strategically and innovatively respond to the pressures created by the environment. Sometimes, there are some aspects which cannot be explained rationally that the handling will need irrational method to establish a conducive atmosphere to put the social cycle within society in order. Therefore, organization will be driven to be isomorphic (having identical form) with the external environment from various mechanisms.

Wahid (2011) and Dimaggio (1983) argued that there are three mechanisms to create an identical form (*isomorphic*); a) *coercive;* b) *mimetic* and; c) *normative*. The Institutional theory is also applied in the study of ICT in the government domain where the study includes multi-disciplines of science such as politic, sociology, and economy.

Originally, the economical approach of an institution used a classic rationality assumption with the assumption of economic system, coordination in the economic activity and market transaction and institutional structure. In this case, of course the role of government system in the institutional economy will be of importance in the institutional and organizational structure.
Similarly, the influence of political science in the development of institutional theory began with two perspectives (Scott: 2001); 1) implementing rational model of economy on the political system; 2) historical perspective on the institutional characteristics which greatly influence the construct of actors and their interests. From the above two matters, the emerging perspectives on the institution as an organization with three analytical levels are concerning the political process, the awareness and articulation of a work structure as well as organizational activities which is the integral parts of a policy.
Institution lies in the scope of social structure so that it has symbolical elements, social activities as well as material resources. The existence of institution is necessary as a set of process characterized by regulative, normative and cognitive culture elements which, of course, full of changes. Therefore, institution will be determined by legitimate legal, procedural, moral and cultural boundaries. It is not only concerning property and social order but also institutional and de-institutional processes.
Previous researches explained that, as a matter of fact, in the development of ICT and its implementation, it is not only the use of technology that contributes to success. However Clark, Lehaney and Evans (2003) argued that the organizational factors have positive influence to the development of technology itself. The research can be used as benchmark that in order to realize the implementation of e-Government it is not only to focus on the role of technology, both hardware and software, but also the organizational factors, of which in this research is the regional information institution having significant role in the success of technological development to be implemented

2. Research Methodology

Research methodology used in this research was explanation method of relationship among variables (interrelationship), that is a method for researching some latent variable, both exogenous(independent) and endogenous(dependent) with manifested variable used as indicator in measuring and explaining latent variables defined in the relationship by testing the formulated hypothesis.
One of the statistical techniques used in identifying dimension as the basis of variables is Multivariate Statistical Technique. The quantity of dimension underlying each variable cannot be observed and therefore is called "Factor". Santoso (2011) and Hair (2006) explained that factor is an identification of dimension of which the quantity cannot be observed, and therefore is called Factor. Dimension is used as the basis or foundation to explain a group of variable, which then to establish a new and simple grouping structure based on those basic characteristics.
Therefore, based on identification of variables along with the manifested variable (factors), Factor Analysis of Multivariate Statistical Technique with Confirmatory Factory Analysis was used to measure each Variable and Manifest and SEM to measure Established Model Structure in order to answer the previously built hypothesis.
The factor analysis is used to find out the interrelationship between number of interdependent variables which are simplified without reducing important information contained in that variables. In other words, factor analysis is a technique that tries to find a interrelationship between numbers of interdependent variables that they can be made of some sets of simplified variable without reducing the content value.
Jogiyanto (2008) explained that variable can be elements of data which is already measured, but sometimes it is a variable that cannot be measured directly. A Variable that cannot be measured directly is called latent variable, or commonly referred to as construct. Therefore, a questionnaire is needed to form a construct. Questionnaire usually contains many items of questions. From these questions, a construct can be formed (Jogiyanto: 2008).
Data used in this research is primary and secondary data. Independent variable (exogenous) in this research is: Leadership. And for the dependent variable (endogenous) in this research is:1). Public Participation**,** 2). Information and Communication Technology, 3). Regional Information and Communication Institution, and 4). Implementation of e-Gov in the field of Public Service for Business Licensing in Jembrana Regency.
For each variable in this research (exogenous and endogenous), it has a dimension which can be adapted theoretically, and in this case, to be used to measure a construct as described by Santoso (2011) and Hair (2006).
A narrative definition has also been sought in order to establish a concept, where Jogiyanto (2011) stated that it is for the purpose of measurement from the dimension and data elements. This definition is then referred to as object, where Jogiyanto (2011) explained that the object is an entity for research. Despite object, there is also property that is the characteristic of objects in terms of psychological or social property.

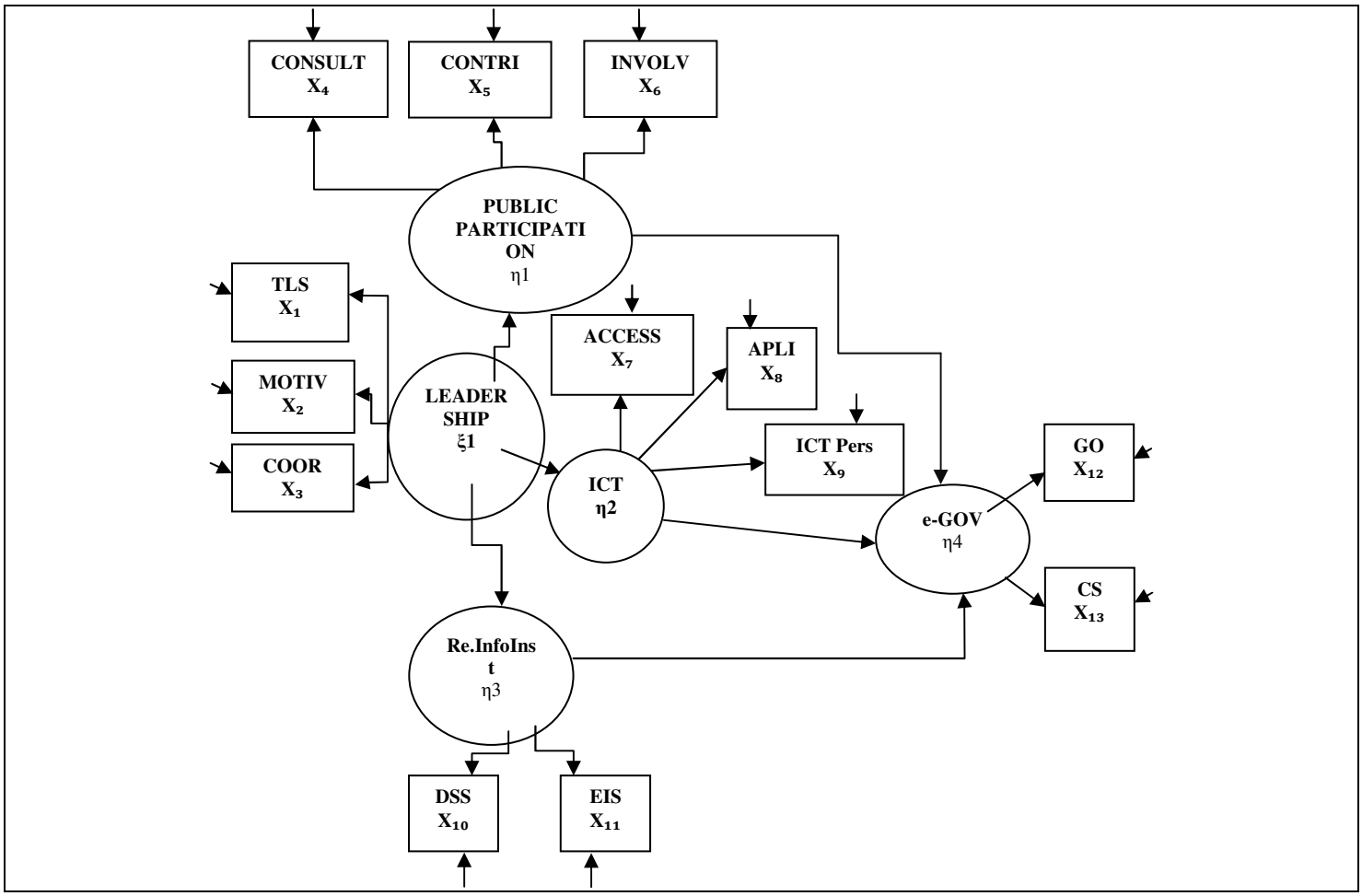

Figure 2: Model Construct of e-Government Implementation for Public Services in Enterprise Permit, Jembrana Regency, Bali

Notes:

ξ^1 exogenous construct (ksi) = Leadership

ξ^1 construct with manifest variable or dimension

Consisting of:

x_1 = Transformational Leadership Style (TLS)

x_2 = Motivation (MOTIV)

x_3 = Coordination (COOR)

η^1 endogenous construct (eta) = Public Participation

η^1 construct with manifest variable or dimension consisting of:

x_4 = Consultation (CONSULT)

x^5 = Contribution (CONTRI)

x^6 = Involvement (INVOLVE)

η^2 endogenous construct (eta) = Information Communication Technology

η^2 construct with manifest variable or dimension consisting of:

x_7 = Accessibility (ACCESS)

x_8 = Application (APLI)

x_9 = Perception of Public Service with ICT (ICT Pers)

η^3 endogenous construct (eta) = Regional Information and Communication Institution (Re.InfoInst)

η^3 construct with manifest variable or dimension consisting of:

x_{10} = Decision Support System (DSS)

x_{11} = Electronic Information System (EIS)

η^4 endogenous construct (eta) = e-Gov ImplementatioN (e-Gov)

η^4 endogenous construct with manifest variable or dimension

consisting of:
x_{12} = Governance *Output*(GO)
Y_{13}= Constituent Satisfaction (CS)
δ = *Measurement Error* related to exogenous construct (delta).
ε = *Measurement Error* related to endogenous construct (epsilon).
ζ = Parameter describing a relationship of exogenous construct and endogenous with manifest variable (alfa).

OPERATIONAL VARIABLES

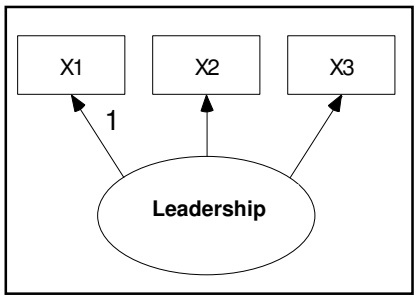

Figure 3: Leadership

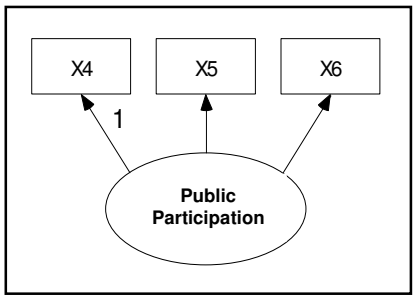

Figure 4: Public Participation

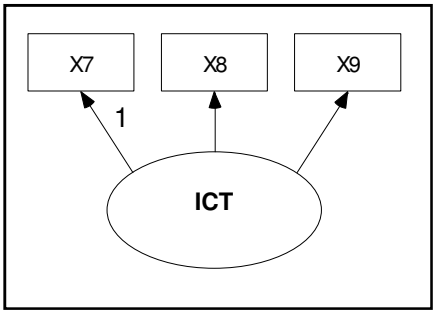

Figure 5: Perception of ICT

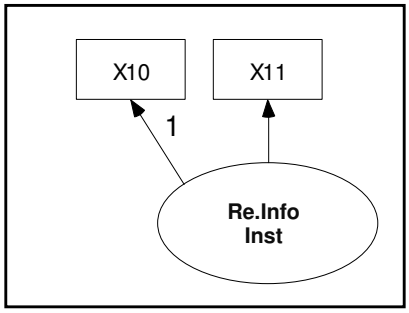

Figure 6: Regional Information and Communication Institution

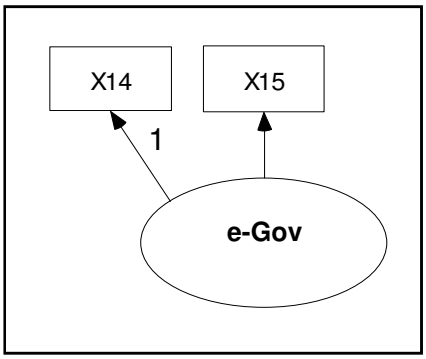

Figure 7: e-Government Implementation for Public Services on Issuing Enterprise Permit, Jembrana Regency, Bali.

2.1. Population and Sample

Population can be distinguished into two types: population study and target population, where it is larger than the sampling population. Sampling population is an analysis unit that provides explanation or data necessary for a study, while the target population is an analysis unit within the government domain. Population in this research is Civil Servant in Jembrana Regency plus public figures totaling up to 1.720 people.

Sample is the part of a number and characteristic of population. Sample in this research is collected using proportionate stratified random sampling, where Sugiyono (2011) explained this as a technique of collecting sample in a proportionate and stratified manner where the population contains heterogeneous elements. The details are as follows:

Respondent	Population	Samples
Regent	1	1
Vice Regent	1	1
Regional Secretariat	288	42
Regional House of Representative Secretariat	34	17
Office of Communication and Information Service	75	55
Office of Industry, Trade and Cooperative	62	33
Health Office	42	36
Office of Integrated Licensing Service	38	16
Office of National Unity, Politics & Public Protection	18	10
Community Empowerment Board and Village Government	25	15
Regional Planning and Investment Agency	42	28
Public Figures	420	15
Businessmen in Trade, Farming, Fishing, Craftsman and Estates	486	43
Businessmen in Hospitality Service	188	25
Total	**1.720**	**337***

Table 4: Population and Sample

For the calculation in order to obtain the sample size in the following table using Slovin formula in (Hariatia: 2012)

$$\frac{N}{1 + N (e)^2} = n$$

Where:

n = sample size
N= Population
E = precision 0.05, then

$$\frac{1.720}{1+ 1.720 (0.05)^2} = 337^*$$

Data collection instrument will be analyzed using questionnaire technique. Questionnaire is a collection of questions relevant with the dimension that represents the variables in order to obtain perception and opinion from the respondents. Using this research, the author distributed a closed questionnaire and provided the answer so that respondents only convey their perception and opinion based on the answers provided. Similarly for the direct questionnaire (respondents assessed themselves) and multiple choices questionnaire.
The respondents completed the questionnaire by choosing one of five (5) answers provided, and put a check on the box. The instrument created for this research was based on the Likert scale of five choices scoring as follows: (a) Score 5 for ALWAYS, (b) Score 4 for FREQUENTLY, (c) Score 3 for RARELY, (d) Score 2 for OCCASSIONALY, (e) Score 1 for NEVER.

2.2. Data Analysis Technique

The researcher utilized descriptive quantitative approach with statistical instrument of SEM model. The purpose of this statistical technique is to find out the causality effect between variables or multivariate, especially in the domain of Social Science. While the framework of thinking is based on the many variables measured by a number of indicators and to test the relationship (latent variable as explained by manifest variable) in a construct of Social Sciences.
SEM has a capability to create a construct model as latent variable or multivariate which is not measured directly, but estimated in a model of variables measured by assumption to have relationship with the variable (latent variable). Therefore, it allows the researcher to create a model explicitly and find the reliability level of model measurement, where theoretically, it benefits us to measure accurately the structural relation between latent variable until arrives to a research model (proposition). The research will be divided into 2 (two) parts: (1) Measurement Model and (2) Structural Model.
Because SEM has two model as mentioned above, each analysis should utilize appropriate tool according to the purpose of the two models. Therefore, the researcher will divide them into two (2) parts; 1). Confirmatory Factor Analysis/CFA, and 2). Structural Equation Model (SEM).

2.3. Evaluation of Goodness of Fit Criteria

In the evaluation of Goodness of Fit criteria, model fitness was known from the review to various types of goodness of fit. This is done to find out whether the data meet the SEM assumption, fitness test and statistical as well as reliability test. Whereas, the SEM

assumption to be used in this research is as follows a). sample size, b). Normality and Linearity, c). Outliers and 4). Multicollinearity and Singularity as described by Ghozali (2008).

2.4. Goodness of Fit Test and Stastitical Test

Goodness of fit test and statistical test used to measure the degree of fitness between models proposed as hypothesis using the presented data. There are some goodness of fit index and cut-off used in the test:

Goodness of Fit Index	Cut-Off Value
Chi-Square x^2	Should be Small
Significant Probability	≥ 0,05
RMSEA	≤ 0,08
GFI	≥ 0,90
AGFI	≥ 0,90
TLI	≤ 0,05
CFI	≤ 0,05

Table 5: Goodness of Fit Index

2.5. Hypothesis Design

Hypothesis design in this research is as follows:

1. $\mathbf{H_0}$: There is no significant influence between Leadership and Public Participation.
$\mathbf{H_a}$: There is significant influence between Leadership and Public Participation.
2. $\mathbf{H_0}$: There is no significant influence between Leadership and ICT.
$\mathbf{H_a}$: There no significant influence between Leadership and ICT.
3. $\mathbf{H_0}$: There is no significant influence between Leadership and Regional Information and Communication Institution.
$\mathbf{H_a}$: There is significant influence between Leadership and Regional Information and Communication Institution.
4. $\mathbf{H_0}$: There is no significant influence between Public Participation. and Implementation of e-Government.
$\mathbf{H_a}$: There is significant influence between Public Participation and Implementation of e-Government.
5. $\mathbf{H_0}$: There is no significant influence between Information & Communication Technology and Implementation of e-Government.
$\mathbf{H_a}$: There is significant influence between Information & Communication Technology and Implementation of e-Government.
6. $\mathbf{H_0}$: There is no significant influence between.
Regional Information and Communication Institution and Implementation of e-Government.
$\mathbf{H_a}$: There is significant influence between Regional Information and Communication Institution and Implementation of e-Government.

3. Result and Discussion

The object in this research was Office of Integrated Licensing Service, Office of Communication and Information Service, Businessmen and public figures in Jembrana Regency. From the data collection in the field, 270 respondents were obtained. The figure does not conform with the total sample, of which based on the sample size of population were 337 samples, because 67 samples cannot return the complete responses, therefore the researcher decided not to use them in order to process the data and further analysis. When using SEM analysis, Ferdinand (2000) explained that the number of sample will be better if between 100-200. If it is more than 400, the method will be 'so sensitive', that it causes difficulty in obtaining the size of *goodness of fit.* Further said, to be ideal in determining number of respondents, the indicator is multiplied by 5 to 10. Therefore, the number of sample of 270 in the research is categorized good for further follow up.

All respondents in this research will be classified into demographic aspect as listed in Table 5.

	Note	Number of Respondents	%
Sex	Men	142	52,62
	Women	128	47,38
Age	<30 years	74	27,4
	30 -39	79	29,3
	40 -49	61	22,5
	>50	56	20,8
Latest Education	Senior High School	84	31,11
	Diploma III	46	17,03
	Strata I	67	24,81
	Strata II	4	1,48
	No Answer	69	25,55
Group (If Civil Servant)	Group I	39	37,14
	Group II	22	20,95
	Group III	15	14,28
	Group IV	2	1,90
	No Answer / Incomplete	25	25,71
Private	-Businessman	45	45
	-Employee	13	13
	-Incomplete	42	42
Invalid Respondent	42 + 27=69		

Table 5: Descriptive Data of Respondents

Figure 8 and Table 6 shows the value *t*-count on each indicator to the variables and proves that in CFA model, Leadership variable has a good validity. This is based on the good validity criteria, where the value of *t*-factor loading ≥ value of t_{table} ($t_{count} \geq 1.969$). Therefore, it can be concluded that the indicator of CFA model could measure the Leadership Variable with a fairly good result.

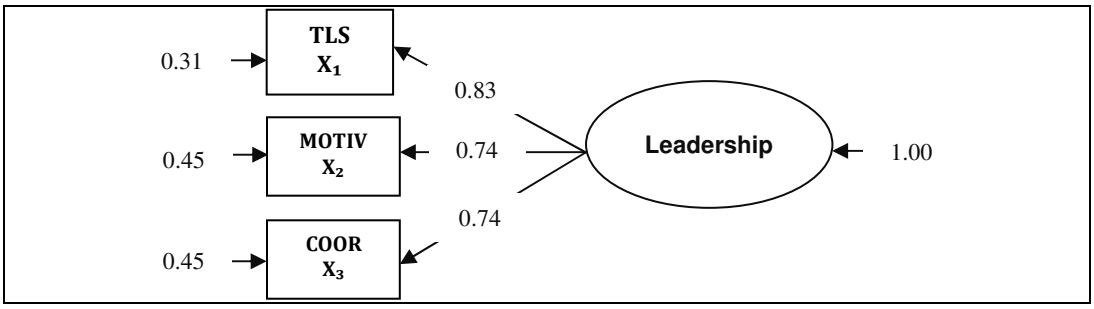

chi-Square=0.00, df=0, p-value=1.00000, RMSEA=0.000

Figure 8: Parameter of Estimated Standardized Loading Factor CFA for Leadership Variable

Indicator	SLF Value	T_{count}	Error	Conclusion
Transformational	0.83	14.44	0.31	Valid
Motivation	0.74	12.70	0.45	Valid
Coordination	0.74	12.69	0.45	Valid

Table 6: Parameter of Estimated Value of $t\text{-}_{count}$ for Leadership Measurement Model

Transformational has the highest weight, meaning that the dominant factor in the Leadership Variable is the **Transformational Leadership Style**, where the indicator weight is 0.83 or R^2 = 68.89% and the rest is explained by other variable (error measurement). While for motivation and coordination, based on the observation, it needs to be improved, especially in order to improve the work achievement and organizational performance to arrive at the vision and mission of regional government

Figure 9 and Table 7 shows the value *t*-count on each indicator to the variables proves that in CFA model, Public Participation variable has a good validity. This is based on the good validity criteria, where the value of *t*-factor loading ≥ value t_{table} ($t_{count} \geq 1.969$). Therefore, it can be concluded that the indicator of CFA model could measure the Public Participation Variable with a fairly good result.

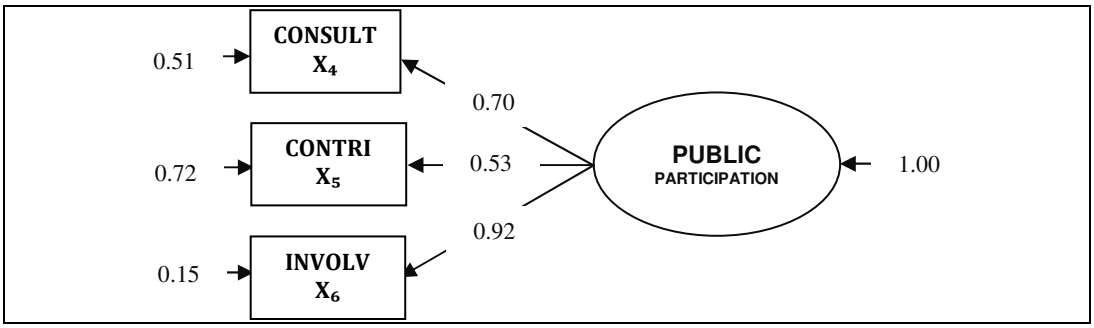

chi-Square=0.00, df=0, p-value=1.00000, RMSEA=0.000

Figure 9: Parameter of Estimated Standardized Loading Factor CFA for Public Participation Variable

Indicator	SLF Value	T_{count}	Error	Conclusion
Consultation	0.70	10.72	0.51	Valid
Contribution	0.53	8.37	0.72	Valid
Involvement	0.92	13.41	0.15	Valid

Table 7: Parameter of Estimated Value of t_{count} for Public Participation Measurement Model

Involvement indicator has the highest weight, meaning that the dominant factor in Public Participation Variable is due to active contribution of Public Involvement, where the indicator weight is 0.92 or R^2 = 84.64% and the rest is explained by other variable (error measurement). Figure 10 and Table 8 shows the value *t*-count on each indicator to the variables proves that in CFA model, ICT variable has a good validity. This is based on the good validity criteria, where the value of t factor loading ≥ value of $t\text{-}_{table}$ ($t\text{-}_{count} \geq$ 1.969). Therefore, it can be concluded that the indicator of CFA model could measure the ICT Variable with a fairly good result

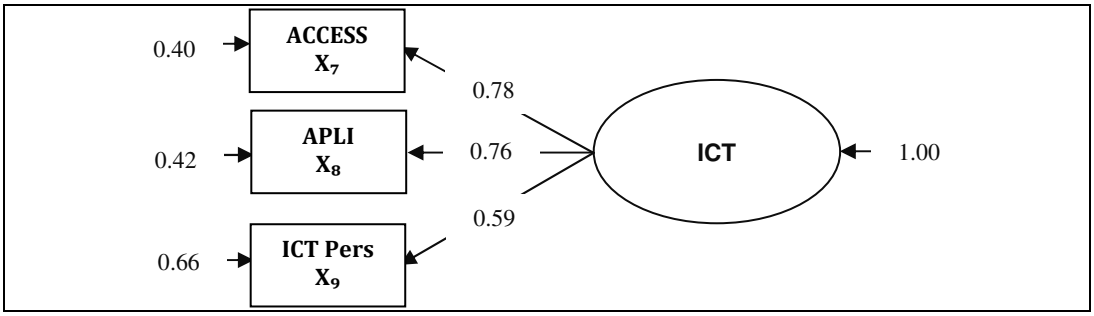

Figure 10: Parameter of Estimated Standardized Loading Factor CFA for ICT Variable
chi-Square=0.00, df=0, p-value=1.00000, RMSEA=0.000

Indicator	SLF Value	T_{count}	Error	Conclusion
Public Service Perception with ICT	0.78	11.75	0.40	Valid
System Application	0.76	11.54	0.42	Valid
Accessibility	0.59	9.19	0.66	Valid

Table 8: Parameter of Estimated Standardized Loading Factor CFA for ICT Variable

Public Service Perception indicator by involving information and communication technology is believed by the people in Jembrana Regency to provide optimal, transparent, accountable public service and free of corruption practices (KKN). Whereas the weight of indicator is the highest among other indicators, meaning that the dominant factors in the ICT Variable is Public Service with ICT, where the weight is 0.78 or R^2 = 60.84% and the rest is explained by other variable (error measurement).

Figure 11 and Table 9 shows that the value of *t*-count on each indicator to the variables of Regional Information and Communication Institution has a good validity when measured using CFA model. This is based on the good validity criteria, where the value of t factor loading ≥ value of t_{table} ($t_{count} \geq$ 1.969). Therefore, it can be concluded that the indicator on CFA model can measure Institution Variable with a fairly good result.

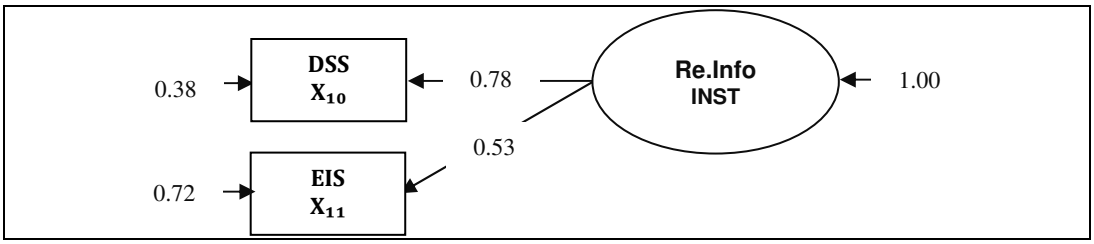

Figure 11: Parameter of Estimated Standardized Loading Factor CFA
chi-Square=0.00, df=0, p-value=1.00000, RMSEA=0.000
Regional Information and Communication Institution Variable

Indicator	SLF Value	T_{count}	Error	Conclusion
Decision Support System	0.78	9.26	0.38	Valid
Electronic Information System	0.53	5.63	0.72	Valid

Table 9: Parameter of Estimated Value of t_{count} for Regional Information and Communication Institution Model

Decision Supporting System indicator can be an indicator which is believed to have big influence to the Regional Information and Communication Institution with highest weight. In other word, it can be explained that the dominant factor in the Regional Information and Communication Institution is the Decision **Supporting System**, where the indicator weight is 0.78 or R^2 = 60.84% and the rest will be explained by other variable (error measurement).
The findings indicate that the implementation of ICT can support the decision making in a fairly good and precise manner. Besides a shorter time-frame, the strategic decision which directly contributes to each stakeholder of the local Regional Government can be fully experienced.
Figure 12 and Table 10 below shows the value of *t*-count on each indicator to the variable of e-Government implementation shows that the CFA model for the variable of e-Government implementation has a good validity. This is based on the good validity criteria, where the value of *t*-factor loading ≥ value of t_{table} ($t_{count} \geq 1.969$). Therefore, it can be concluded that the indicator of CFA model could measure the e-Government Implementation Variable with a fairly good result.

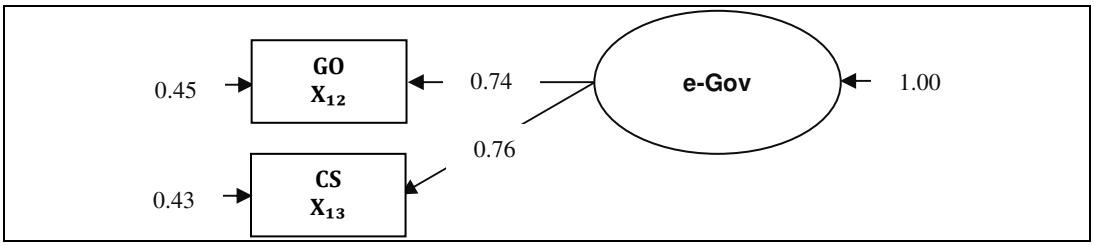

Figure 12: Parameter of Estimated Standardized Loading Factor CFA for e-Government Implementation
chi-Square=0.00, df=0, p-value=1.00000, RMSEA=0.000

Indicator	SLF Value	T_{count}	Error	Conclusion
Governance Output	0.74	7.17	0.45	Valid
Constituent Satisfaction	0.76	6.76	0.43	Valid

Table 10: Parameter of Estimated Value of t_{count} for e-Government Implementation Measurement Model

Constituent Satisfaction has the highest weight, meaning that the dominant factor in e-Government Implementation Variable is due to the established **Constituent Satisfaction** which has a strong perception on the success of e-Government implementation itself, where the weight of indicator is 0.76 or R^2 = 57.76% and the rest is explained by other variable (error measurement).

3.1. Reliability of Measurement Model
The followings are the value of construct reliability (CR) for each construct in the measurement model:

Construct	*Construct Reliability*
Leadership	0.815
Public Participation	0.770
ICT	0.754
Agency	0.609
Pe-Gov	0.719

Table 11: Construct Reliability of the Measurement Model

It is shown on the table above that the value of Construct Reliability of each variable has exceeded the threshold of 0.60. This indicates that the reliability level on each construct is relatively high, therefore the indicators on each construct is fairly consistent to measure the construct (Leadership, Public Participation, Information & Communication Technology, Regional Information and Communication Institution and e-Government Implementation).

3.2. Goodness of Fit Diferential

Below is the descriptive evaluation result of the overall goodness of fit:

Compatibility Index	Estimated Value	Criteria	Note
RMSEA	0,076	≤ 0,08	Fit
GFI	0,92	≥ 0,9	Fit
RMR	0,0095	≤ 0,05	Fit
NNFI	0,98	≥ 0,9	Fit
CFI	0,98	≥ 0,9	Fit
IFI	0,98	≥ 0,9	Fit
NFI	0,97	≥ 0,9	Fit

Table 12: Compatibility Index of Descriptive Model

Table 12 is the proof that the model is fairly good. This is shown by the value of compatibility index, which in overall fits the data. Therefore, it can be concluded that the compatibility of all model is good.

3.3. Structure Equitation Model Analysis

From the structural model, it can be found how the influence between latent variables, in this case is the Influence of Leadership to the Public Participation, ICT, and Regional Information and Communication Institution and the implication to the e-Government Implementation in Jembrana Regency. Figure 13 and Table 13 shows the estimated standardized parameter (weight value) of structural model of the model in question.

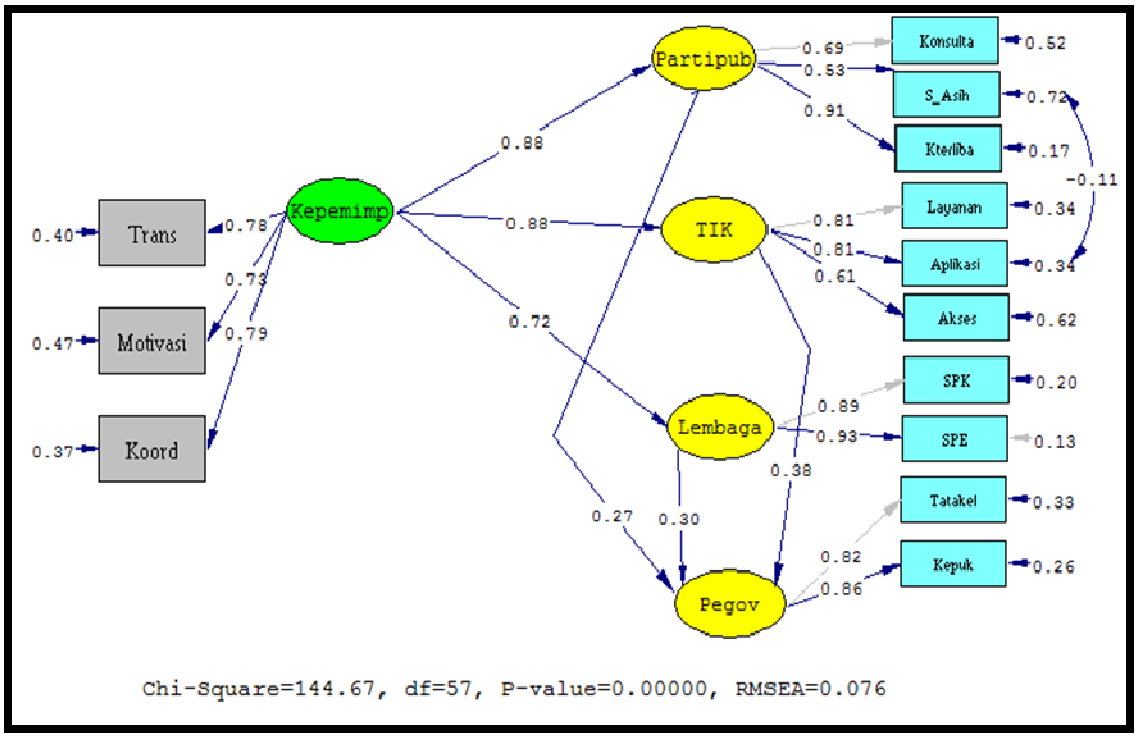

Figure 13: Figure 13Parameter of Estimated Standardized Loading Factor SEM[1]

3.4. Parameter of Estimated Standardized Structural Model I

[1]Note: the writer used Figure 13 as the result shows authentically from Lisrel's Output. It's have a different label for operational variable (Bahasa Indonesia version), which has shown in the beginning of this paper. The purpose of using original construct on Figure 13 is, to avoid an auto plagiarism.

The hypothetical test for the influence of Leadership to the Public Participation, Information and Communication Technology, Regional Information and Communication Institution is as follows:

Latent Variable	Estimation		Note
Exogenous → Endogenous	**Standardized**	**T-value**	
1. Leadership to Public Participation	0,88	10,79*	Significant
2. Leadership to ICT	0,88	13,17*	Significant
3. Leadership to Institution	0,72	11,17*	Significant

Table 13: Parameter of Estimated Standardized Structural Model I

1. H_0: There is no significant influence between Leadership and Public Participation.
Ha: There is significant influence between Leadership and Public Participation.
Test Criteria: Reject the null hypothesis if $t\text{-}_{count} \geq t\text{-}_{table}$. Accept null hypothesis if $t\text{-}_{count} < t\text{-}_{table}$ Dengan $t_{tabel} = t_{(0,025;148)} = 1,968$

Based on the test output, it obtained value of $t\text{-}_{count} = 10.79 \geq t\text{-}_{table} = 1.968$ then H_0 is rejected. This means with the significance level of 5%, it can be concluded that there is a positive influence between Leadership and Public Participation. The extent of positive influence between Leadership and Public Participation is 0.88. Or it can be said that there is positive influence of Leadership, R^2 = 77, 44%, to the Public Participation in Jembrana Regency. While other, 22.56% is explained by other variables.

2. H_0: There is no significant influence between Leadership and ICT
H_a: There is significant influence between Leadership and ICT.
Test Criteria: Reject the null hypothesis if t-count ≥ t-table. Accept the null hypothesisif $t_{count} < t\text{-}table$ Dengan $t_{tabel} = t_{(0,025;148)} = 1,968$

Based on the test output, it obtained value of $t\text{-}_{count} = 13.17 \geq t\text{-}_{table} = 1.968$ then H_0 is rejected. This means with the significance level of 5%, it can be concluded that there is a positive influence between Leadership and Information and Communication Technology. The extent of positive influence between Leadership and Information and Communication Technology is 0.88. Or it can be said that there is positive influence of Leadership, R^2 = 77, 44, 24%, to the Information and Communication Technology in Jembrana Regency. While other, 22.56% is explained by other variables.

3. H_0: There is no significant influence between Leadership and Regional Information and Communication Institution.
H_a: There is significant influence between Leadership and
Regional Information and Communication Institution.
Test Criteria: Reject the null hypothesis if *t-count* ≥ *t-table***.** Accept the null hypothesis if $t_{count} < t\text{-}table$ Dengan $t_{tabel} = t_{(0,025;148)} = 1,968$

Based on the test output, it obtained value of $t\text{-}_{count} = 11.17 \geq t\text{-}_{table} = 1.968$ then H_0 is rejected. This means with the significance level of 5%, it can be concluded that there is a positive influence between Leadership and Regional Information and Communication Institution. The extent of positive influence between Leadership and Regional Information and Communication Institution is 0.72. Or it can be said that there is positive influence of Leadership, R^2 = 77, 44, 24%, to the Regional Information and Communication Institution in Jembrana Regency. While other, 48.16% is explained by other variables.

3.5. Parameter of Estimated Standardized Structural Model II

Table 14 explained that the hypothesis testing part II showed the significance of Public Participation, Information Technology & Computer, and Regional Information and Communication Institution to the e-Government Implementation in Jembrana Regency is as follows:

Latent Variable	Estimation		Note
Endogenous → Endogenous	**Standardized**	***T* value**	
4. Public Participation to Pe-Gov	0,27	2,82*	Significant
5. ICT to Pe-Gov	0,38	3,79*	Significant
6. Institution to Pe-Gov	0,30	4,78*	Significant

Table 14: Parameter of Estimated Standardized Structural Model II

4. H_0: There is no significant influence between Public Participation and e-Government Implementation.
Ha: There no significant influence between Public Participation and e-Government Implementation.

Test Criteria: Reject the null hypothesis if $t\text{-}_{count} \geq t\text{-}_{table}$. Accept null hypothesis if $t\text{-}_{count} < t\text{-}_{table}$.
Dengan $t_{tabel} = t_{(0,025;148)} = 1,968$

Based on the test output, it obtained value of $t\text{-}_{count} = 2.82 \geq t\text{-}table = 1.968$ then H_0 is rejected. This means with the significance level of 5%, it can be concluded that there is a positive influence between Public Participation and e-Government Implementation. The extent of positive influence between Public Participation and e-Government Implementation is 0.27. Or it can be said that there is positive influence of Public Participation, R^2 = 77, 44, 24%, to the e-Government Implementation in Jembrana Regency. While other, 92.71% is explained by other variables.

5. H_0: There is no significant influence between Information & Communicating Technology and e-Government Implementation.
Ha: There is significant influence between Information & Communication Technology and e-Government Implementation.
Test Criteria: Reject the null hypothesis if $t\text{-}count \geq t\text{-}_{table}$. Accept null hypothesis if $t_{count} < t\text{-}_{table}$.
Dengan $t_{tabel} = t_{(0,025;148)} = 1,968$

Based on the test output, it obtained value of $t\text{-}_{count} = 3.79 \geq t\text{-}_{table} = 1.968$ then H_0 is rejected. This means with the significance level of 5%, it can be concluded that there is a positive influence between Information and Communication Technology and e-Government Implementation. The extent of positive influence between Information & Communication Technology and e-Government Implementation is 0.42. Or it can be said that there is positive influence of Information & Communication Technology, R^2 = 77, 44, 24%, to the e-Government Implementation in Jembrana Regency. While other, 85.56% is explained by other variables.

6. H_0: There is no significant influence between Regional Information & Communication Institution and e-Government Implementation.
Ha: There is significant influence between Regional Information & Communication Institution and e-Government Implementation.
Test Criteria: Reject the null hypothesis if t-count $t\text{-}count \geq t\text{-}_{table}$. Accept null hypothesis if $t_{count} < t\text{-}_{table}$. With $t_{table} = t_{(0.025;\ 148)} = 1.968$.

Based on the test output, it obtained value of $t\text{-}_{count} = 4.78 \geq t\text{-}table = 1.968$ then H_0 is rejected. This means with the significance level of 5%, it can be concluded that there is a positive influence between Regional Information and Communication Institution and e-Government Implementation. The extent of positive influence between Regional Information & Communication Institution and e-Government Implementation is 0.30. Or it can be said that there is positive influence of Regional Information & Communication Institution, R^2 = 9% to the e-Government Implementation in Jembrana Regency. While the rest, 92% is explained by other variables.

4. Conclusion

Based on the research, the author finally concluded that there is a positive and significant relationship between Leadership and Public Participation, Information and Communication Technology, Regional Information and Communication Institution, and it has positive implication to the e-Government implementation in Business Licensing Service in Jembrana Regency, Bali.

From this result, we can perceive that e-Government implementation will go well if the leadership factors with transformational leadership style are improved, where it is proven to have an influence on Public Participation, ICT and Regional Information and Communication Institution as factors that have positive implications for the success of e-Government implementation in Jembrana Regency.

Similarly, based on the research, it is proved that the better the Public Participation, perceptions of ICT services and Regional Information and Communication Institution, then the e-Government Implementation in the field of Businesses Licensing Service in Jembrana Regency will be also better.

Departing from the implication of the research, the following suggestions can be conveyed in relation with the successful e-Government implementation of in Business Licensing Service in Jembrana Regency.

First, local government of Jembrana Regency needs to establish clear standards and better leadership skills, with specific optimization on the Transformational Style that has been proven to give positive contribution to Public Participation, ICT, Regional Information and Communication Institution so as to provide a positive impact on the success e-Government implementation *E-Government* in Business Licensing Service.

Second, local governments of Jembrana Regency needs to provide encouragement both individual and collective motivation in the context of the agencies within the domain of Jembrana Regency Government to nurture and develop the ability of civil servants to constantly innovate in delivering public services and civil services to the public.

Third, local government of Jembrana Regency, which in this case is the Office of Communication and Information Service needs to periodically provide the widest opportunities for all people to participate democratically by introducing ICT as a medium of interaction between people and the government on a regular, professional and proportional basis.

Fourth, dissemination of people knowledge and skills need to be improved in order to access the official government portal up to the remote areas, villages and *dusun*. Involving elements of universities and local non-governmental organizations to help introducing as

well as teaching anything closely related to the applications and technologies used in the community to improve the accessibility of public. At the same time, in order to increase public participation to express their aspirations.

5. References

i. Adisasmita, Rahardjo. 2011. Manajemen Pemerintah Daerah. Jogyakarta. Graha Ilmu.
ii. Ancok, Djamaludin.2012. Psikologi Kepemimpinan & Inovasi.Jakarta. Erlangga.
iii. Arief, Sosiawan Edwin. ___.Tantangan dan Hambatan Dalam Implementasi E Government di Indonesia. UPN "Veteran" Yogyakarta. Yogyakarta.
iv. Ali, Eko Maulana. 2012. Kepemimpinan Transformasional dalam Birokrasi Pemerintahan. P.T Multicerdas Publishing. Jakarta.
v. Bass, Bernard M & Riggio, Ronald Avolio. 2006. Transformational Leadership, Second Edition. London. Lawrence Erlbaum Associates Publishers.
vi. Bhogle, Srinivas. 2008. E-Government. National Aerospace Labortaries. India.
vii. Charles, Parker & Thomas, Case. 1993. Management Information Systems; Systems and Action 2nd Ed. California. Mitchell McGraw-Hill.
viii. Curtin, G. Gregory. 2007. E-Government.University of Southern California. Manuscript. Sage Publication.
ix. Cohen dan Uphoff, 1977. Rural Development Participation; Concept and Measurement for Project Design Implementation, and Evaluation, Cornell University, New York.
x. David, Fred, R. 2006. Strategic Management; Konsep Edisi 10. Bahasa Indonesia Edition. Salemba Empat. Jakarta.
xi. Fahtul Wahid.2011. Explaining History of eGovernment Implementation in Developing Countries: An Analytical Framework. New York. International Federation for Information Processing. Springer.
xii. Ferdinand, Augusty. 2002. Structural Equation Modelling dalam Penelitian Manajemen. BP Universitas Diponogoro. Semarang.
xiii. Fontana, Avanti.2009. Innovate We Can! Manajemen Inovasi dan Penciptaan Nilai. Gramedia Widiasarana Indonesia.
xiv. Gary, Fk. 2005. Kepemimpinan Dalam Organisasi Edisi Bahasa Indonesia. Jakarta. Index.
xv. Garna, H. Judistira. 2007. Penelitian dalam Ilmu Pemerintahan. Bandung. Primaco Akademika dan Jusditira Garna Foundation.
xvi. Ghozali, Imam & Fuad. 2005. Structural Equation Modeling; Teori, Konsep, & Aplikasi dengan Program Lisrel 8.54. BP Universitas Diponogoro. Semarang.
xvii. Hair, Joseph.2006. Multivariate Data Analysis Sixth Edition. New Jersey. Pearson Education.
xviii. Halwani, R Hendra. 2002. Ekonomi Internasional & Globalisasi Ekonomi.Jakarta. Ghalia Indonesia.
xix. Hariati. 2012. Pengaruh Koordinasi, Kompetensi Aparat, Anggaran dan Partisipasi Masyarakat Terhadap Efektifitas Pemberdayaan Usaha Kecil di Kabupaten Sarolangun Provinsi Jambi. Dissertation Brief. Satyagama University. Jakarta
xx. Hubeis, Musa. 2006. Peranan Pengambil Kebijakan Dalam Pengembangan Masyarakat. A Paper. Bogor. Bogor Agricultural University.
xxi. Ibrahim, Amin. 2006. Teori dan Konsep Pelayanan Publik Serta Implementasinya. Padjajaran University. Bandung.
xxii. Indrajit, Richardus. 2002.ElectronicGovernment: Strategi dan Pengembangan Sistem Pelayanan Publik Berbasis Teknologi Digital.Jogyakarta. Andi Jogyakarta.
xxiii. Indrajit, Richardus.2001. E-Commerce Kiat dan Strategi Bisnis di Dunia Maya. Jakarta. Elex Media Komputindo.
xxiv. James, A. F. Stoner & Charles, Wankel. 1986. Management 3rd Ed. New Jersey. Prentice Hall.
xxv. James, M. Kouzes & Barry, Z. Posner. 1993. Credibility. San Fransisco. Jossey-Bass.
xxvi. Jerry, Kinard. 1988. Management. Canada. D. C. Health and Company.
xxvii. Jogiyanto, HM. 2003. Sistem Teknologi Informasi. Jogyakarta. Andi.
xxviii. Jogiyanto, HM. 2004. Metodologi Penelitian Bisnis; Salah Kaprah dan Pengalaman. Jogyakarta. BF Faculty of Economics, Gadjah Mada University.
xxix. Jogiyanto, HM. 2008. Metodologi Penelitian Sistem Informasi. Jogyakarta. Andi Jogyakarta.
xxx. John, R. Scherhorn, Jr. 2005. Management 8th Ed. US. International Student Edition. Willey & Sons, Inc.
xxxi. Judith, E. Innes & David, E. Booher.2004. Reframing Public Participation: Strategies For the 21st Century. Routledge Taylor & Francis Group. Planning Theory and Practice. Vol. 5, No. 4, Page 419-436.
xxxii. Koswara, Endang. 2007. Teori Pemerintahan Daerah. Jakarta. Institut Pemerintahan Press.
xxxiii. Kouzes, James M. & Barry Z. Posner.1987. Transformational Leadership in Government. Delray Beach, Florida. St. Lucie Press.
xxxiv. Kuncor, Mudrajad. 2006. Strategi; Bagaimana Meraih Keunggulan Kompetitif? Erlangga. Jakarta.
xxxv. Lembaga Administrasi Negara. 2003. Penyusunan Standar Pelayanan Publik. Jakarta. LAN.
xxxvi. Luis Felipe Luna-Reyes & J. Ramon Gil-Garćia.2011.Using Institutional Theory and Dynamic Simulation to Understand Complex E-Government Phenomena. US. Government Information Quarterly, Volume:28, Issue:3, Pages:329-345. Elsevier, Inc.
xxxvii. Mahbubani, Kishore.2008. Asia Hemisfer Baru Dunia. Jakarta. Gramedia.

xxxviii. Manullang, Rizal. 2006. Analisis Perancangan Sistem Transaksi Elektronik Dengan Menggunakan Media Informasi Online Dalam Meningkatkan Kinerja Dinas Perindustrian, Perdagangan dan Investasi Kota Pangkalpinang. Thesis. Jakarta. STTIBI.
xxxix. Mat, Syuroh. 2008. Pengaruh Motivasi, Kompetensi Aparatur dan Partisipasi Masyarakat Terhadap Kualitas Pelayanan Pendidikan, Dalam Penyelenggaraan Pemerintah di Kabupaten Musi Banyuasin. Jakarta. Dissertation Brief. Satyagama University.
xl. Martin, James. 1996. Cyber Corporation. New York. American Management Association.
xli. Nugroho, Riant. 2010. Perencanaan Strategis. Jakarta. Elex Media.
xlii. Nanoka & Takeuchi. 1995. Knowledge Creating Company. Oxford Press.
xliii. Ndraha, Talizidu. 2003. Kybernology Jilid I. Bandung. Rineka Cipta.
xliv. Ndraha, Talizidu. 2004. Kybernology Jilid II. Bandung. Rineka Cipta.
xlv. Ostrom, Elinor. 1996. Crossing the Great Divide: Coproduction, Synergy, and Development. World Development, Vol. 24, No. 6 (June 1996), 1073-87.
xlvi. Prasetiyo, Didit. 2008. Partisipasi Masyarakat Dalam Implementasi Kebijakan Pemerintah (Studi Kasus Pelaksanaan Program Wajib Belajar Sembilan Tahun Di DistrikSemangga, Kabupaten Merauke), Thesis, Diponegoro University. Semarang.
xlvii. Sandjojo, Didjo.2011. Metode Analisis Jalur dan Aplikasinya.Jakarta. Pustaka Sinar Harapan.
xlviii. Santoso, Singgih.2011.Struktural Equation Modeling; Konsep dan Aplikasi.Jakarta. Elex Media Komputindo.
xlix. Sarwono, Jonathan. 2012.Metode Riset Pendekatan Kuantitatif. Jakarta. Elex Media Koputindo.
l. Sarwono, Jonathan. 2011. Path Analisyis.Jakarta. Elex Media Koputindo.
li. Sharma, Sanggeta. 2008. Ecological E-Government. California. IGI Global.
lii. Sherry, Arnstein. 1969. A Ladder of Citizen Participation. JAIP. Vol. 3. No. 4.
liii. Siagian, Sondang. 2005. Sistem Informasi Manajemen. Jakarta. Bumi Aksara.
liv. Sofyan, Safari Hamin. 2005. Pengaruh Pengembangan Pengorganisasian Kelurahan Yang berasal Dari Desa Terhadap Pelayanan Publik di Kota Depok, Provinsi Jawa Barat. Jakarta. Dissertation Brief. Satyagama University.
lv. Sugiyono. 2011. Metodologi Penelitian Kuantitatif dan Kualitatif. Alfabeta. Bandung.
lvi. Suhirman. 2004. Kerangka Hukum dan Kebijakan Tentang Partisipasi Warga Di Indonesia. Laporan Penelitian Independen, The Ford Foundation. Bandung.
lvii. Supriatna, Tjahya. 2007. Manajemen Pemerintahan Kontemporer.Jakarta. Doctoral Handbook. Satyagama University.
lviii. Supratikno, Hendrawan dkk. 2005. Advanced Strategic Management. Jakarta. Gramedia Pustaka Utama.
lix. Supriyanto, Budi. 2009.Manajemen Pemerintahan (plus dua belas langkah strategis). Tanggerang. Media Brillian.
lx. Suhirman. 2004. Kerangka Hukum dan Kebijakan Tentang Partisipasi Warga Di Indonesia. Independent Research Report, The Ford Foundation. Bandung.
lxi. Tapscott, Don. 1998. Growing Up Digital-The Rise of The Net Generation. United States. McGraw-Hill.
lxii. Tangkilisan, Hessel Nogi.2005.Manajemen Publik.Jakarta. Gramedia.
lxiii. Tatang, M. Amirin. 1984. Pokok-pokok Teori Sistem. Raja Grafindo. Jakarta.
lxiv. Thomas, Webler & Seth, Tuler. 2001. Public Participation in Watersheld Management Planning.___. Human Ecological Research. Vol. 8 No. 2.
lxv. Tjokroamidjojo, Bintoro Mustopadidjaja. 1986. Teori dan Strategi Pembangunan Nasional. Jakarta: PT. Gunung Agung.
lxvi. Yamin, Sofyan & Kurniawan, Heri. 2009. Struktrural Equatation Modeling. Salemba Empat, Infotek. Jakarta.
lxvii. Yogi & M. Ikhsan. 2006. Standar Pelayanan Publik Di Daerah. Jakarta. Handbook Manajemen Pemerintahan Daerah. PKKOD-LAN
lxviii. Raymond, McLeod. 2001. Sistem Informasi Manajemen Edisi Bahasa Indonesia. Index.Jakarta.
lxix. Rahmat, Pahsa. Faktor-faktor Yang Mempengaruhi Penerapan Good Corporate Governance Dan Privatisasi Pada BUMN (Studi Kasus BRI).Jakarta. Dissertation Brief. Satyagama University.
lxx. Wardana, I Made. 2007. Analisis Pembangunan Provinsi Bali Menuju Balance Growth. Buletin Studi Ekonomi. Vol.12 Nomor 2. Udayana University.
lxxi. Winasa, I Gde. 2004. Pelayanan Satu Loket di Kabupaten Jembrana. Jembrana. Office of Communication and Information Service.
lxxii. _____.2002. Otonomi Daerah dan Akuntanbilitas Publik Dalam Persfektif Lokal. Jakarta. Workshop, 20 Agustus 2002. LIPI and SMERU.